HEAD acoustics

DATA SHEET

APPLICATION EXAMPLES INCLUDED



Code 6597

HRR I

HEAD acoustics Rotating Reflector

OVERVIEW

HRR I

Code 6597

HEAD acoustics Rotating Reflector

HRR I is a motorized rotating reflector. It dynamically changes the acoustic coupling between loudspeakers and microphones of a terminal in arbitrary hands-free communication scenarios. Thus, it helps realizing a time-variant echo path when applying speech signals. HRR I operates noise-free and with high precision.

Typical applications for testing with HRR I are echo-performance tests for hands-free terminals in vehicles, all types of smart speakers, conferencing devices, and mobile devices with hands-free telephony function. In this regard, HRR I complies with the Recommendations ITU-T P.1100, ITU-T P.1110, ITU-T P.1120, and ITU-T P.1140 regarding measurements of echo attenuation performance for in-vehicle hands-free systems.

KEY FEATURES

Precise and fully repeatable time-variation of the echo path

Noise-free motion

Pulse trigger for synchronization of rotation and play-back

Different rotation operations determined by the pulse length

Fully automated operation with appropriate ACQUA standards (e.g., ITU-T P.1100/P.1110/P.1120/P.1140, HQS-SmartHome)

APPLICATIONS

Dynamic change of the echo path for acoustic tests/ measurements of hands-free devices with

- Full automation
- High accuracy
- Full repeatability

Dynamic change of the echo path in measurements according to Recommendation ITU-T P.1100/P.1110/ P.1120/P.1140

Variable echo path tests according to Microsoft Teams Audio Test Specification

DETAILS

The quality of communication in hands-free scenarios is heavily influenced by the acoustic situation surrounding the talker/listener and the device under test. For this reason, manufacturers of any hands-free capable device apply complex signal processing to ensure good communication quality. Quickly changing acoustic conditions – typical for hands-free communication – pose an additional challenge for hands-free systems and devices. For development and optimization, it is therefore vital to be able to influence the acoustic coupling between loudspeaker and microphones during tests, creating a time-variant echo path in a reproducible manner.

DESCRIPTION

General

HRR I can be used in any hands-free situation and any location as an automated, quickly moving, and noise-free acoustic reflector. The goal is to identify and subsequently optimize the system's general communication quality and echo attenuation performance under varying acoustic conditions.

For tests of in-vehicle hands-free communication, HRR I is compliant with the Recommendations ITU-T P.1100/P.1110/P.1120/P.1140 regarding a changing echo path. As such, it currently is the only described method to guarantee noise-free, accurate, and fully repeatable measurements to change the echo path as specified.

Besides hands-free systems in vehicles, HRR I can be used in any anechoic or reverberant test room; and other arbitrary places to specifically and reproducibly influence acoustic coupling. Typical applications for testing with HRR I are echo-performance tests for all types of smart speakers and other smart home devices, conferencing devices, and mobile devices with hands-free telephony function.

Mechanical Design and Drive System

HRR I consists of a lightweight, acoustically reflective surface mounted to a noiseless electric drive system. The reflector is a panel with a sandwich structure providing high mechanical robustness and excellent acoustic reflectivity up to high frequencies. The stepper motor of HRR I combines high rotation speeds with accurate motion. For preventing undesired sound transmission from the power train, the motor is mechanically decoupled from panel and pedestal. Even with its advanced electronic drive system, HRR I operates noise-free. A circular baseplate allows steady positioning on flat and even surfaces. HRR I can also be mounted on tripods. Therefore, it can operate vertically as well as horizontally.

The reference position for the panel is determined through a Hall-effect sensor, ensuring full reproducibility of all measurements. For receiving pulse commands, HRR I connects to one of the general-purpose interfaces (GPIO 1/2) of *lab*CORE[1]. Specified pulse signals are included in the audio file (*.hdf) for controlling the rotation of HRR I and executing repeatable measurements. ACQUA standards that apply HRR I (e.g. P.1100, P.1140, Microsoft Teams) include corresponding trigger signals for HRR I. The ACQUA Signal Editor (ACOPT 01) enables manual editing of audio files (*.hdf) to add pulse commands for controlling HRR I.

1 Alternatively, HRR I can be triggered by any device with a BNC output capable of generating appropriate pulse signals.

Control and Connection

HRR I communicates with *lab*CORE and ACQUA over an RS-485 serial connection. The supplied breakout cable CUD IV adapts USB type-A (power supply) from the ACQUA computer. The BNC (trigger input) connector of CUD IV is connected to *lab*CORE. CUD IV may be extended with the serial cable CAB II.10 by ten meters.

TECHNICAL DATA

General

Serial connection	D-Sub 9-pin, RS-485
Pulse input	D-Sub 9-pin
Rotation angle	360°, unlimited full rotations in both directions (CW, CCW)
Revolutions per minute	up to 15 rpm
Angular resolution	0.01°
Angular repeatability	0.1°

Electrical

Inrush current	1 A via USB 3.0
Power consumption	Typical 2.5 W via USB 3.0

Electric Motor

Motor type	Hybrid stepper motor
Frame size	NEMA 17
Holding torque	max. 0.08 Nm

Environmental Conditions

Operating temperature	0 – 45 °C (32 – 113 °F)
Storage temperature	-20 – 70 °C (-4 – 158 °F)
Air humidity	20%–80% (non-condensing environment)

Dimensions

Reflector plate dimensions	300 mm × 400 mm × 6 mm
Total dimensions	300 mm × 525 mm × 180 mm
Weight	1.3 kg

OPTIONS

ACOPT 01 (Code 6811)

› ACQUA option signal generator and editor

COMPONENTS

HRR I comprises several components – the main parts are displayed below. The reflector panel is held by a bracket that connects to the drive shaft of the stepper motor through the main housing. The base plate ensures stability when placed on flat surfaces. The connector for the serial cable sits at the bottom edge of the main housing to keep the cable close to the surface below and reduce tension on the plug.

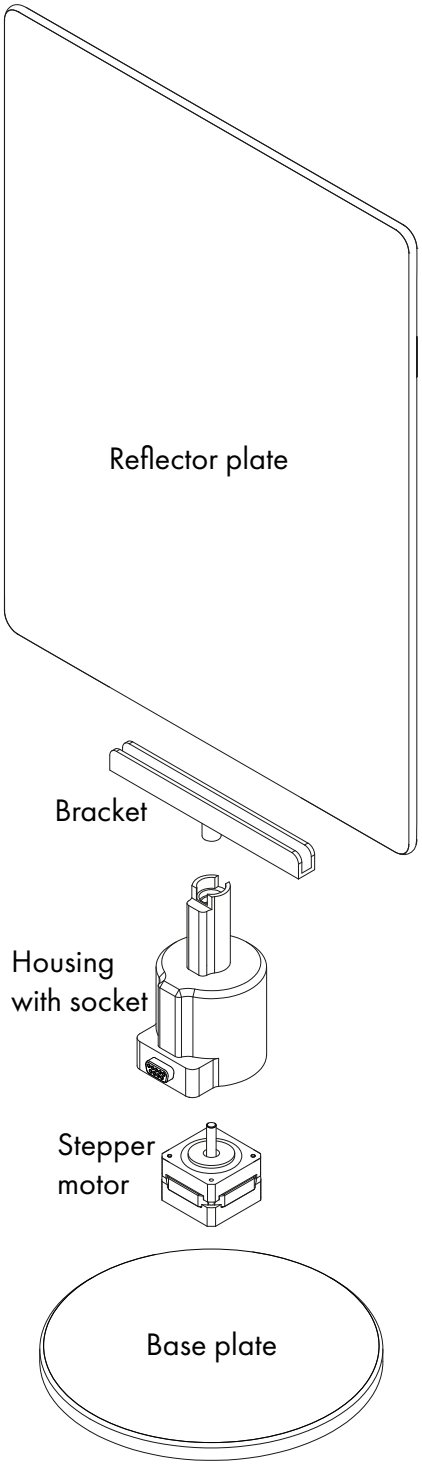

GENERAL REQUIREMENTS

Hardware

*lab*CORE (Code 7700)

› Modular multi-channel hardware platform

Software

One of the following software applications:

ACQUA (Code 6810)

› Advanced Communication Quality Analysis Software, full license version

ACQUA Compact (Code 6860)

› Compact test system

SCOPE OF DELIVERY

HRR I (Code 6597)

› HEAD acoustics Rotating Reflector

CUD IV (Code 6113)

› Adapter USB + BNC <> D-Sub 9-pin, RS-485

CAB II.10 (Code 6093-10)

› Cable D-Sub 9-pin, 10 m

Manual

IN PRACTICE

APPLICATION EXAMPLES

Echo Performance with Variable Echo Path in a Vehicle

A computer runs ACQUA and is connected to *lab*CORE. ACQUA controls *lab*CORE, and provides/analyzes incoming signals. *lab*CORE distributes the signals via its interfaces. The hands-free terminal (HFT) is directly connected to the network simulated by a radio tester. The radio tester is connected to *lab*CORE via Ethernet. HMS II.3 just represents the physical appearance of the driver in this configuration.

HRR I provides a rotating reflecting surface during the playback of the speech signal from the loudspeakers of the hands-free terminal. Thus, the echo path is variable which affects the echo attenuation of the echo canceler. The requirement for this test demands that the echo level stays below a specified value for a certain amount of time. The echo level is recorded with the microphone of the hands-free terminal. The signal is transmitted via the radio tester and *lab*CORE to ACQUA. Then, ACQUA analyzes and evaluates this signal according to the requirement.

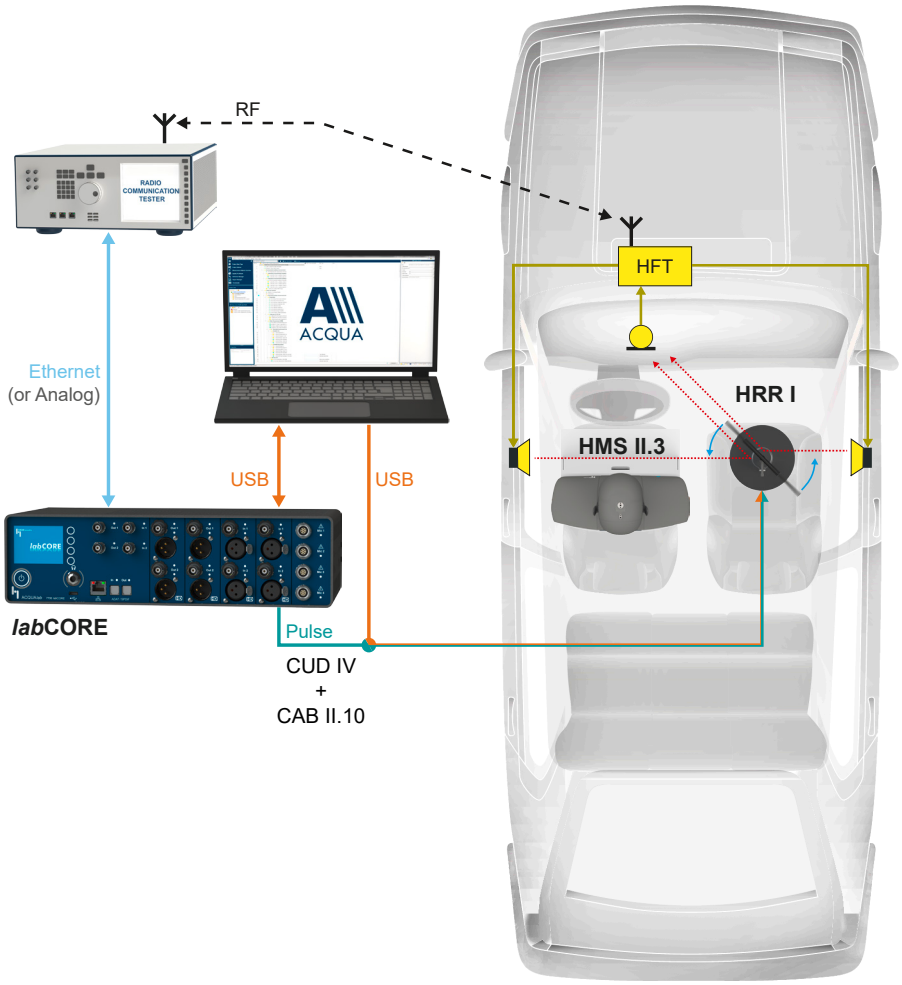

Echo Performance of a Hands-Free Terminal with Variable Echo Path

A computer runs ACQUA and is connected to *lab*CORE. ACQUA controls *lab*CORE, and provides/analyzes incoming signals. *lab*CORE distributes the signals via its interfaces. The hands-free terminal is directly connected to *lab*CORE via USB. HMS II.3 just represents the physical appearance of the talker in this configuration.

HRR I provides a rotating reflecting surface during the playback of the speech signal from the loudspeakers of the hands-free terminal. Thus, the echo path is variable which affects the echo attenuation of the echo canceler. The requirement for this test demands that the echo level stays below a specified value for a certain amount of time. The echo level is recorded with the microphone of the hands-free terminal. The signal is transmitted via *lab*CORE to ACQUA. Then, ACQUA analyzes and evaluates this signal according to the requirement.

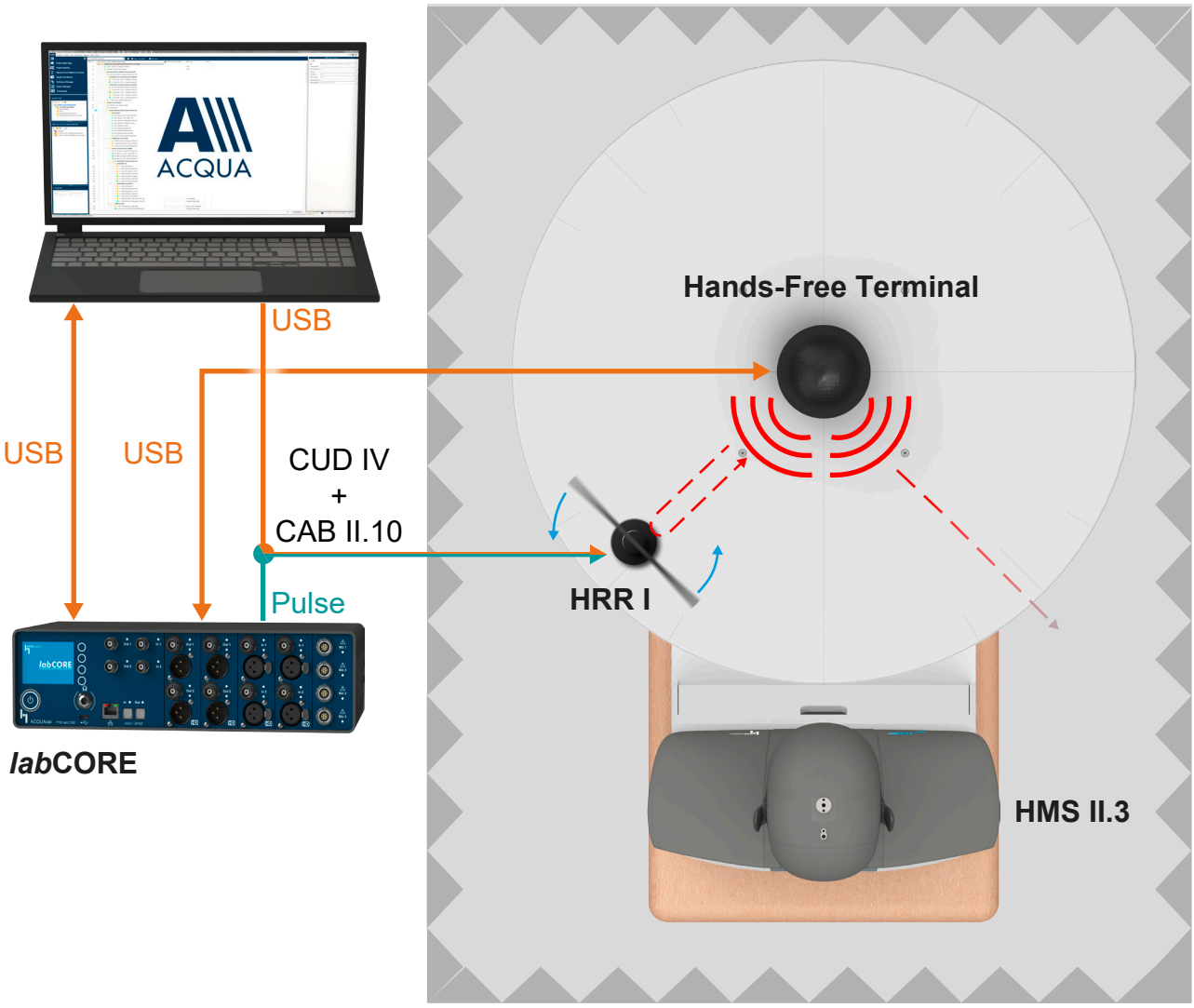

HEAD acoustics

Contact Information

Ebertstraße 30a
52134 Herzogenrath, Germany
Phone: +49 2407 577-0
E-Mail: sales@head-acoustics.com
Website: www.head-acoustics.com